Corded Wood Pole

Fitting Instructions

Tools you will need...

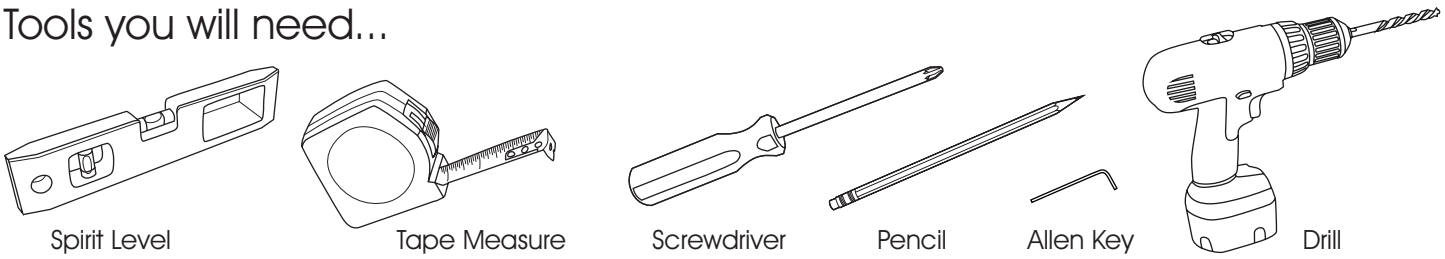

CORDED WOOD POLE APPROXIMATE WEIGHT LIMITS

Bracket Type	45mm Pole Diameter	55mm Pole Diameter
Clasp, Metal and Wood Architrave	Up to 2.7kg per metre	Up to 4kg per metre
Recess Bracket	Up to 3.5kg per metre	Up to 5kg per metre

how to fit your corded wood pole...

METAL BRACKETS

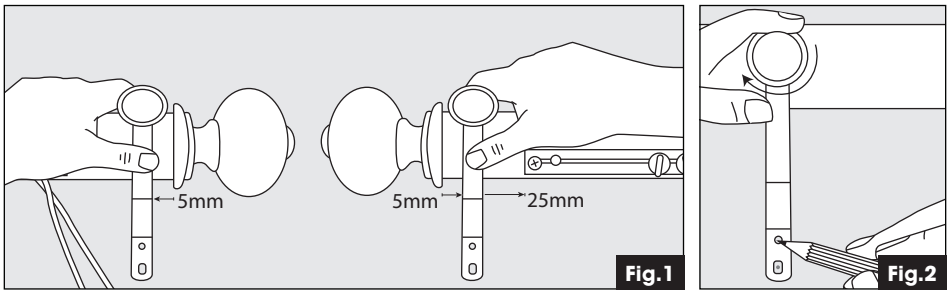

Step 1: Mark your Screw Positions – these vary by bracket type as follows:

Metal Brackets

Fit the brackets 5mm from each end of the pole, this will be 25mm from the track (fig 1), then screw the bracket button clockwise to tighten (Fig 2).

With brackets attached, hold the pole to the wall and, ensuring that the pole is level, mark the screw positions (Fig.2).

WOOD CLASP BRACKETS

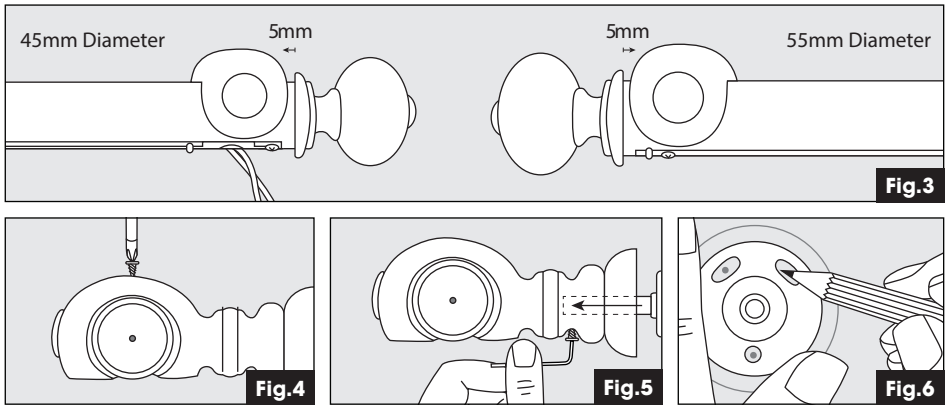

Wood Clasp Brackets
(poles up to 210cm only)

Slide the brackets on to the pole and put them 5mm from each end of the pole (Fig.3).

Screw into the hole on the clasp bracket to secure to the pole (Fig.4).

With the brackets attached, hold the pole in your required position, ensuring the pole is level and then draw around each of the bracket bases.

Using the allen key provided unscrew the backplate from the bracket (Fig.5).

Position the back plate in the centre of the drawn circle ensuring the hole on the stem of the backplate is facing upwards and mark the screw positions (Fig.6).

WOOD ARCHITRAVE BRACKETS

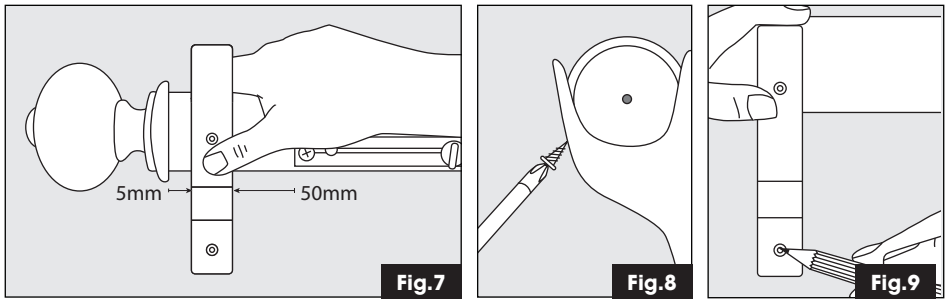

Wood Architrave Brackets
(poles up to 210cm only)

FIt the brackets 5mm from each end of the pole and this will be 50mm from the track (Fig.7).

Screw into the hole in the bracket cup to secure to the pole (Fig.8).

With brackets attached, hold the pole to the wall and, ensuring that the pole is level, mark the screw positions (Fig.9).

WOOD RECESS BRACKETS

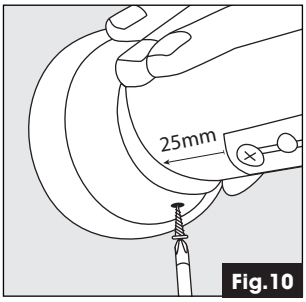

Fig.10

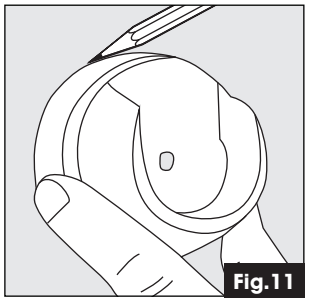
Fig.11

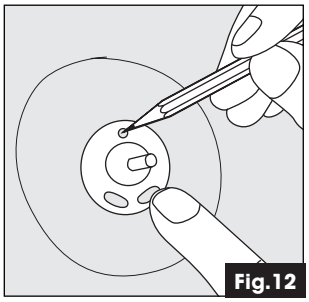
Fig.12

⚠ WARNING

Young children can be strangled by loops in pull cords, chains, tapes and inner cords that operate this product.

To avoid strangulation and entanglement, keep cords out of reach of young children. Cords may become wrapped around a child's neck. Move beds, cots and furniture away from window covering cords. Do not tie cords together. Make sure cords do not twist and create a loop.

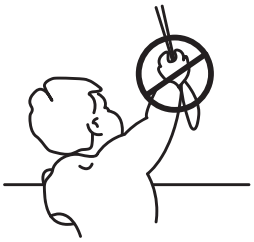

WHITE NYLON TENSION PULLEY

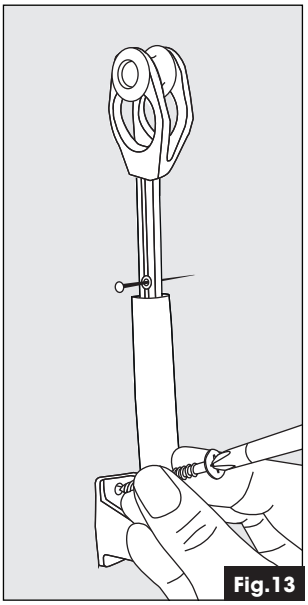
Fig.13

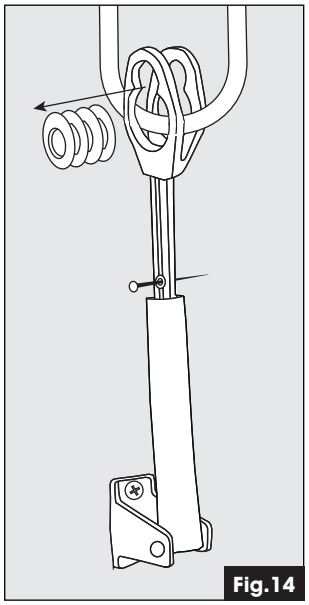
Fig.14

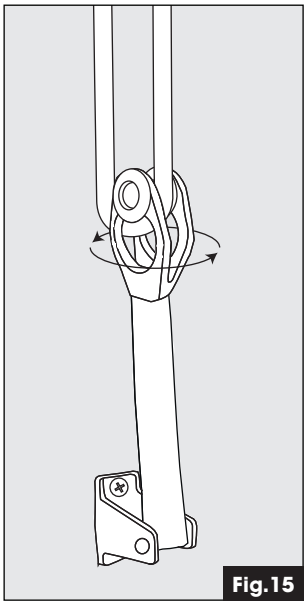
Fig.15

METAL TENSION PULLEY

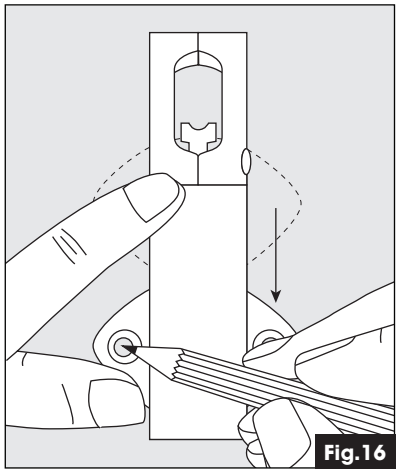
Fig.16

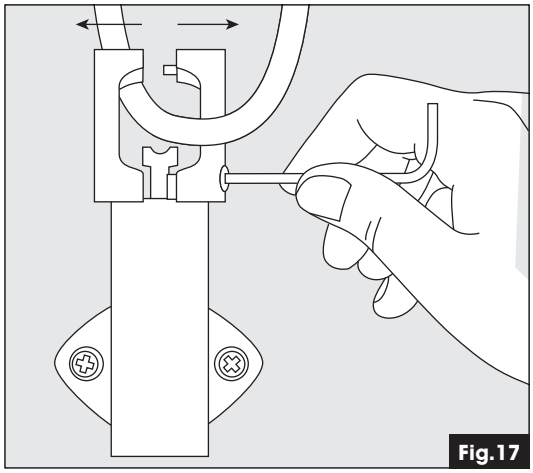
Fig.17

Wood Recess Brackets
(poles up to 210cm only)

Slide the pole into the recess brackets and secure by using the brass screws supplied, the end of the bracket will be 25mm from the track (Fig.10).

With brackets attached, hold the pole to the wall and, ensuring that the pole is level, draw around each bracket base (Fig.11).

Detach the back plate, position in the centre of the drawn circle and mark the screw positions (Fig.12).

Step 2: Fix the Brackets

Detach the pole from the brackets, if using clasp brackets no need to remove the pole. Drill into the marked positions and fit the brackets or backplates to the wall.

If using Metal Brackets: Place the pole into the brackets and tighten the screw plate on the front of the bracket to secure the pole into position.

If using Clasp Brackets: Place pole and brackets in to the backplate and secure the brackets to the backplate by screwing the grub screw in to the backplate using the allen key provided.

If using Recess Brackets: Screw the brackets on to the backplate and place pole into position, Secure the poles in to place by using the brass screws supplied.

Always ensure that the correct screws and walls plugs are used for your wall type.

Child Safety Warning: Installation of the cord tensioner must be at a minimum of 150cm from the floor. If you cannot fit the device at least 150cm from the floor with sufficient tension on the cord, please contact the Sales Team for assistance in shortening the cord.

Step 3: Fitting Your Cord Tension Device

If using a White Nylon Tension Pulley: Using the screws supplied fix the tension pulley to the wall or window sill directly in line with the pull cord (Fig.13).

Extend the neck of the pulley and secure in higher position using a pin or small nail. Remove the central barrel of the pulley by pulling it down and then out (Fig.14).

Place the cord inside the pulley and replace the barrel ensuring it clicks into place.

Remove the pin or nail from the pulley, the cord should now be fully tensioned.

If the cord becomes twisted, rotate the head of the pulley to untwist (Fig.15).

If using a Metal Tension Pulley: Pull the back plate on the tensioner down, place against the wall or window frame at least 150cm from the floor and mark the screw holes. Fit to the wall using the appropriate plugs and screws for your wall type (Fig.16).

Use the Allen Key to open the top of the tensioner and insert the cord (Fig.17). Close the top of the tensioner and tighten.

HALLIS HUDSON
Committed to excellence

Hallis Hudson Group Ltd,
Unit C34, Red Scar Business Park, Longridge Road, Preston, Lancashire, PR2 5NN
Sales Tel: 01772 202 202 | Sales Fax: 01772 515 515
e-mail: sales@hallishudson.com | www.halliswebshop.com
www.hallishudson.com